CERTIFICATE

By Authority Of
THE UNITED STATES OF AMERICA
Legally Binding Document

By the Authority Vested By Part 5 of the United States Code § 552(a) and Part 1 of the Code of Regulations § 51 the attached document has been duly INCORPORATED BY REFERENCE and shall be considered legally binding upon all citizens and residents of the United States of America. *HEED THIS NOTICE*: Criminal penalties may apply for noncompliance.

Document Name: IAPMO PS-5: Material and Property Standard for Special Cast Iron Fittings

CFR Section(s): 24 CFR 3280.604(b)(2)

Standards Body: International Association of Plumbing and Mechanical Officials

APPROVED

Official Incorporator:
THE EXECUTIVE DIRECTOR
OFFICE OF THE FEDERAL REGISTER
WASHINGTON, D.C.

INTERNATIONAL ASSOCIATION OF PLUMBING AND MECHANICAL OFFICIALS

MATERIAL AND PROPERTY STANDARD

FOR

SPECIAL CAST IRON FITTINGS

IAPMO PS 5-84

1. PURPOSE

1.1 The purpose of this Standard is to establish a generally acceptable standard for special fittings. Its purpose is to serve as a guide for producers, distributors, architects, engineers, contractors, installers, inspectors, and users; to promote understanding regarding materials, manufacture and installation; and to provide for identifying fittings that conform with the Standard.

The provisions of this Standard are not intended to prevent the use of any alternate material or method of construction, provided any such alternate meets the intent of this Standard.

2. SCOPE

2.1 This Standard covers laying lengths, radii, material requirements and other significant properties in addition to general description of the final product. Certain features of construction and general description of material requirements are also given, together with the methods of marking and identification.

2.2 The fittings, covered by this Standard, are intended for use in normal drainage installations when installed in compliance with the Uniform Plumbing Code as published by the International Association of Plumbing and Mechanical Officials, hereinafter referred to as IAPMO.

3. GENERAL REQUIREMENTS

3.1 Material requirements, wall thickness, diameters, tappings, hubs and spigots shall conform to ASTM A74 (latest edition) for bell and spigot pipe and fittings or Cast Iron Soil Pipe Institute Standard 301 (latest edition) for No Hub, unless otherwise indicated on Plates.

3.2 Laying lengths and special radii shall conform to those shown on Plates.

Licensed to Public.Resource.Org. Distribution Prohibited.

4. MARKING AND IDENTIFICATION

4.1 All special fittings, whether of regular bell and spigot or hubless type, which conform to this Standard shall be marked with the letter "S" together with manufacturer's name and other required marking.

Adopted by Membership: 1957
Revised: 1959, 1966
Re-Confirmed: 1977, 1984

Licensed to Public.Resource.Org. Distribution Prohibited.

FIGURE No. 6

Revised and Extended

LEFT HAND SHOWN

4 X 2 SINGLE — RIGHT OR LEFT

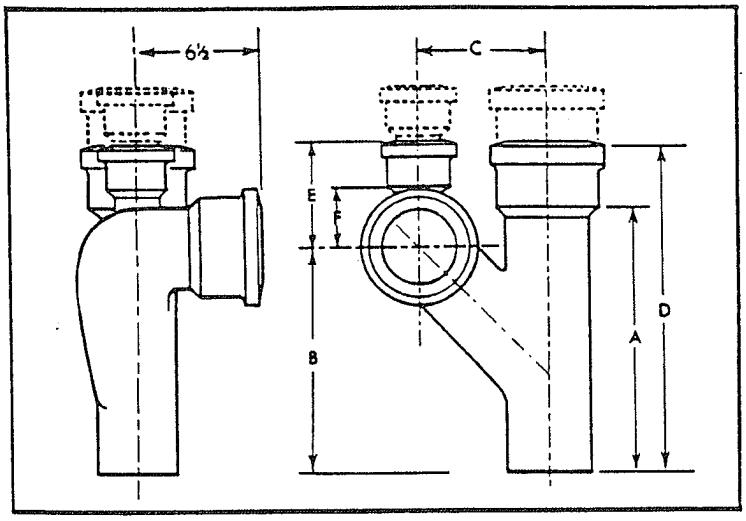

	DIMENSIONS					
	A	B	C	D	E	F
Figure No. 6	13-5/8	11-1/2	6-1/2	16-5/8	5-1/8	2-5/8
Fig. 6 Extended	16-1/2	11-1/2	6-1/2	19-1/2	8	5-1/2

FIGURE No. 8

Revised and Extended

4 X 2 SINGLE — RIGHT OR LEFT

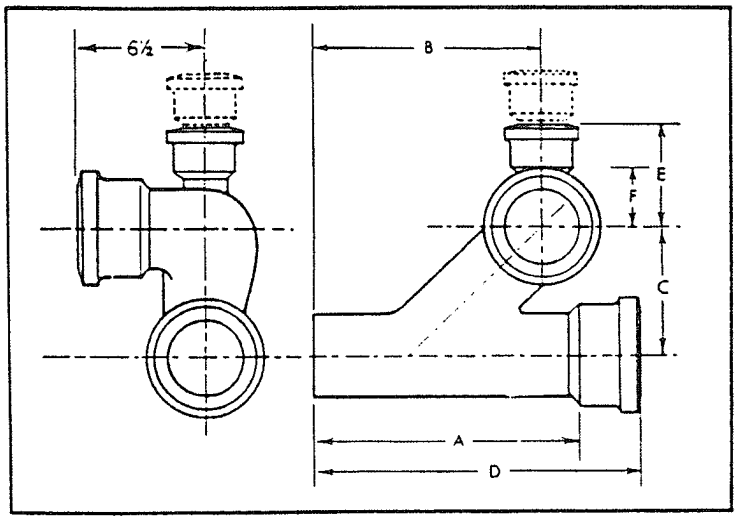

	DIMENSIONS					
	A	B	C	D	E	F
Figure No. 8	13-5/8	11-1/2	6-1/2	16-5/8	5-1/8	2-5/8
Fig. 8 Extended	13-5/8	11-1/2	6-1/2	16-5/8	8	5-1/2

Licensed to Public.Resource.Org. Distribution Prohibited.

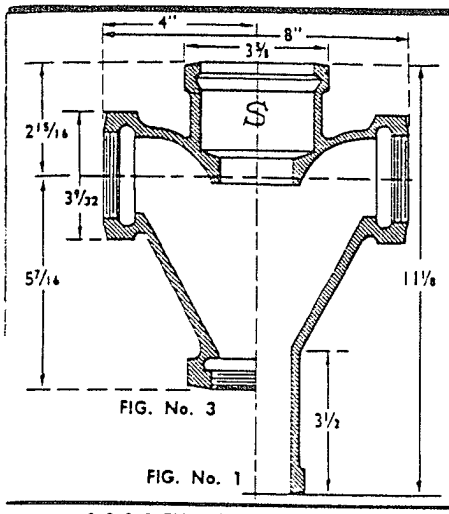

FIG. No. 3

FIG. No. 1

2x2x2x2 FIGURES No. 1 & No. 3

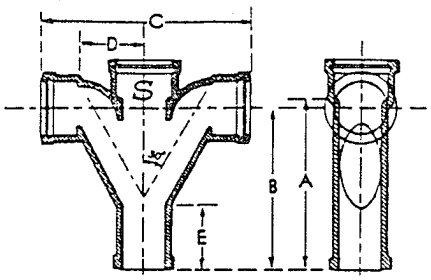

SIZE	A	B	C	D	E
4x4	12 7/16	11 13/16	16¾	5 9/16	4
4x3	12	11 13/16	16¾	5 9/16	4
4x2	12	11½	15⅞	5⅛	4
3x3	11⅛	10¾	13¾	4¼	4
3x2	10	9⅞	13¾	4¼	4
2x2	8¼	7⅝	10¼	2¾	3½

FIGURE No. 5

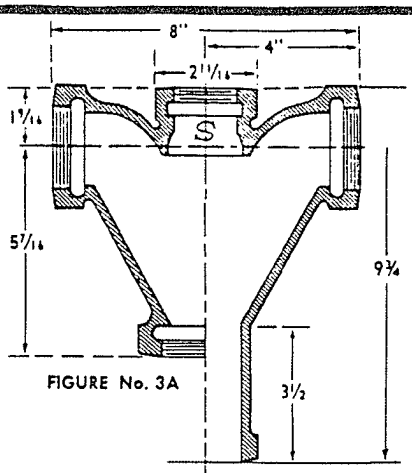

FIGURE No. 3A

FIGURE No. 1A

2x 1½ x2 x2 FIGURES No. 1A & No. 3A

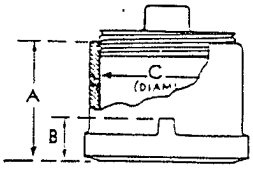

SIZE	A	B	C	I.P.S. TAPPING
2	3½	1¼	2	1½
3	3¾	1⅜	3	2½
4	4¼	1½	4	3½
5	4¼	1½	5	4
6	4¼	1½	6	5
8	4½	1⅞	8	6
10	4½	1⅞	10	6
12	5¼	2⅜	12	6
15	5¼	2⅜	15	6

CLEAN-OUTS*

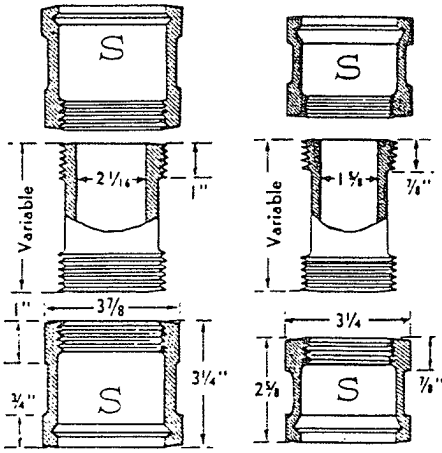

1½" and 2" Approved WASTE UNION

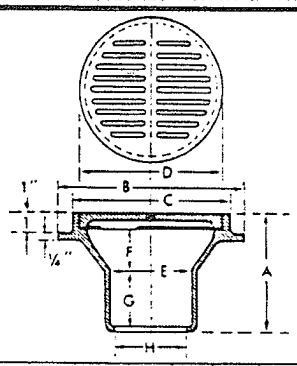

Size	A	B	C	D	E	F	G	
2"	5	7¼	5¾	5⅓	3	1½	2½	2½
3"	5¾	9	7⅝	7	4	2	2¾	3⅓
4"	6⅓	11	9¾	9	5	2½	3	4⅓

Approved CESSPOOL DRAINS

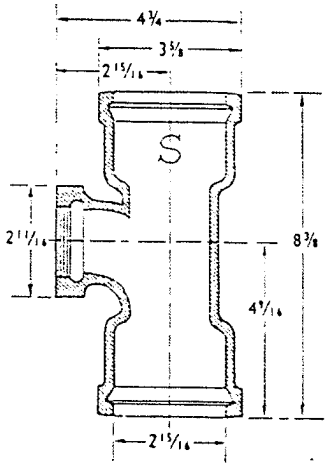

2 x2 x1½ DOUBLE HUB TAPPED SANITARY TEE

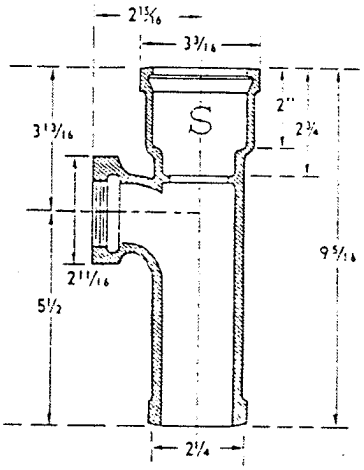

2 x1½ x1½ SOIL TAPPED SANITARY TEE

Licensed to Public.Resource.Org. Distribution Prohibited.

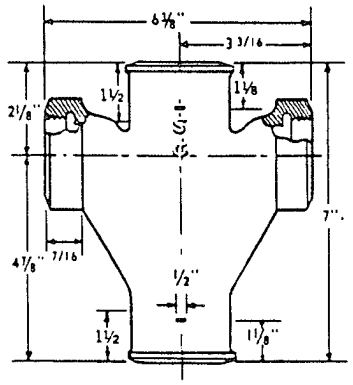

NO-HUB FIGURE 1A — 2 x 2 x 1½ x 1½

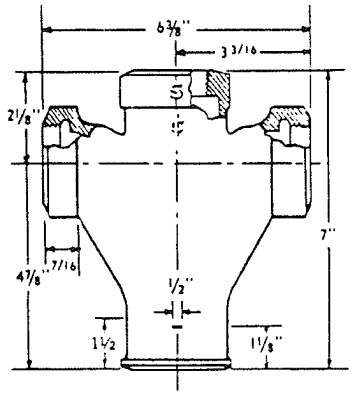

NO-HUB FIGURE 1B — 2 x 1½ x 1½ x 1½

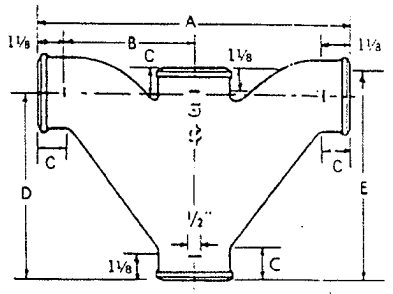

SIZE	A	B	C	D	E
3"	13⅛	5-7/16	1½	8⅞	10⅛
3 x 2	13⅛	5-7/16	1½	8⅞	9¼
4"	15½	6½	1½	10¼	12
4 x 2	15½	6½	1½	10¼	11

NO-HUB FIGURE 5

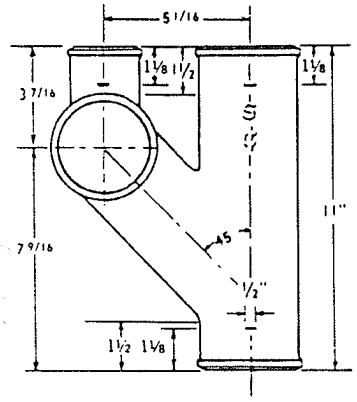

LEFT HAND SHOWN

NO-HUB FIG. 6 — 3 x 2 SINGLE LEFT or RIGHT

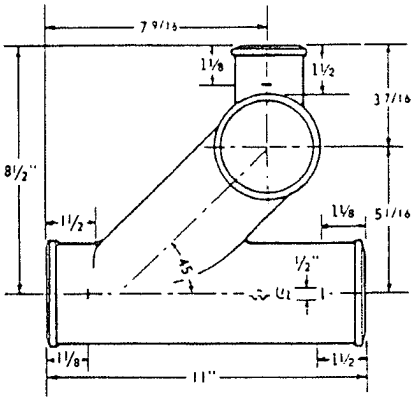

LEFT HAND SHOWN

NO-HUB FIG. 8 — 3 x 2 SINGLE LEFT or RIGHT

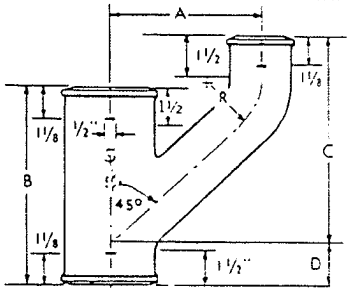

SIZE	A	B	C	D	R
2 x 2	5½	7	8¼	2	3
3 x 2	5½	7	8-3/16	1½	3
3 x 3	5½	8⅜	8-7/16	2-3/16	3½
4 x 2	5½	7	8¼	1	3
4 x 3	5½	8⅜	8-7/16	1-11/16	3½
4 x 4	6	9¾	9⅛	2-7/16	4

NO-HUB UPRIGHT Y

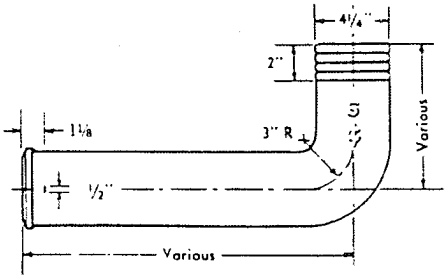

NO-HUB 4" CLOSET BEND

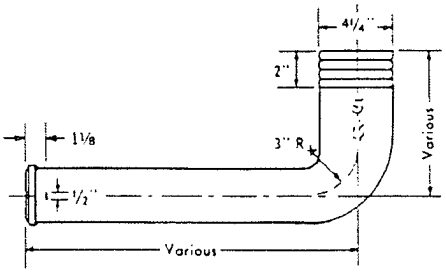

NO-HUB 4x3 CLOSET BEND

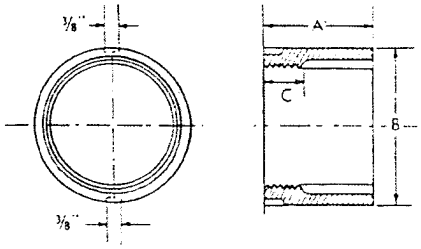

SIZE	A	B	C	IPS Tapping
3"	2-3/16	3-⅜	¾	2½"
4"	2-3/16	4-7/16	¾	3½"

NO-HUB IRON BODY CLEANOUT

Licensed to Public.Resource.Org. Distribution Prohibited.

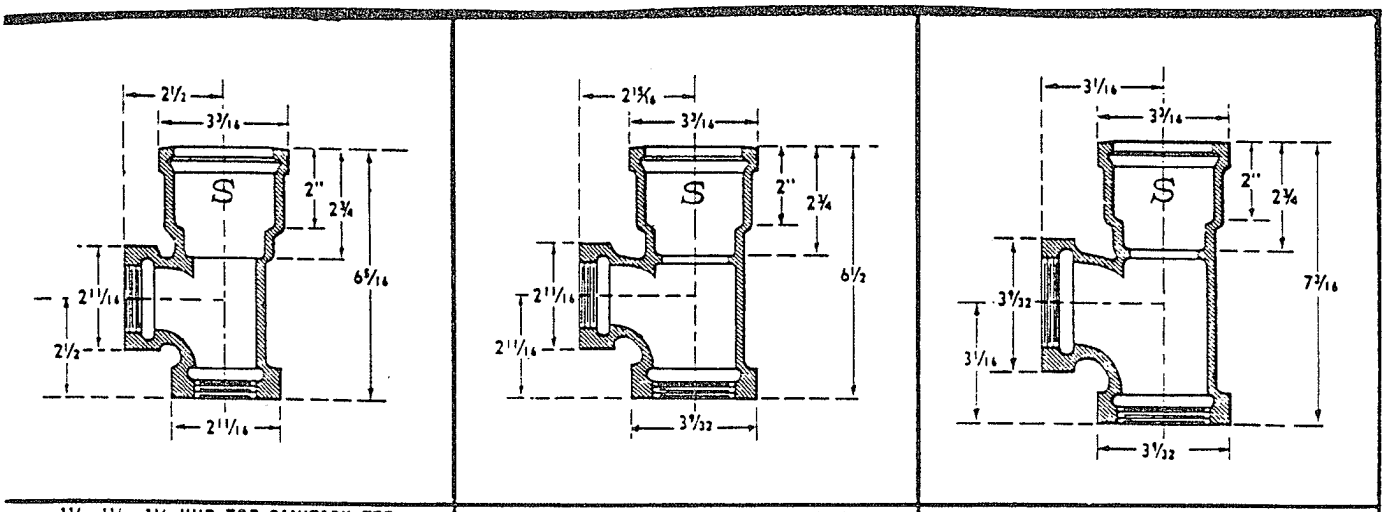

1½ x1½ x1½ HUB TOP SANITARY TEE | 2 x1½ x1½ HUB TOP SANITARY TEE | 2 x1½ x2 HUB TOP SANITARY TEE

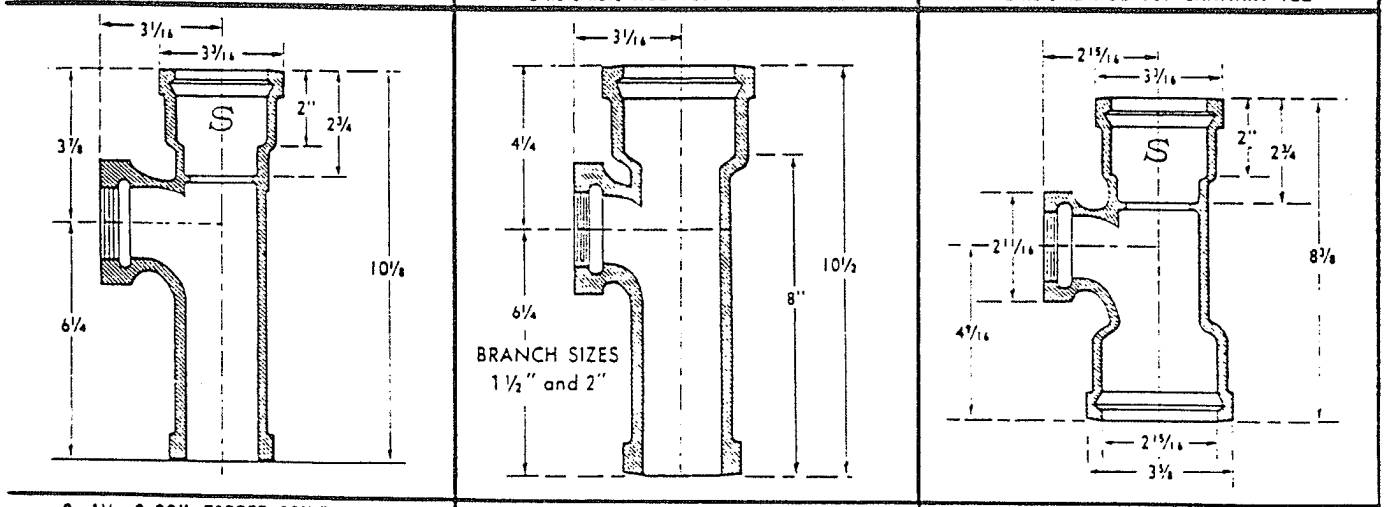

2x 1½x 2 SOIL TAPPED SANITARY TEE | 2" SANITARY TAPPED TEE* | 2 x1½ x1½ DOUBLE HUB TAPPED SANITARY TEE

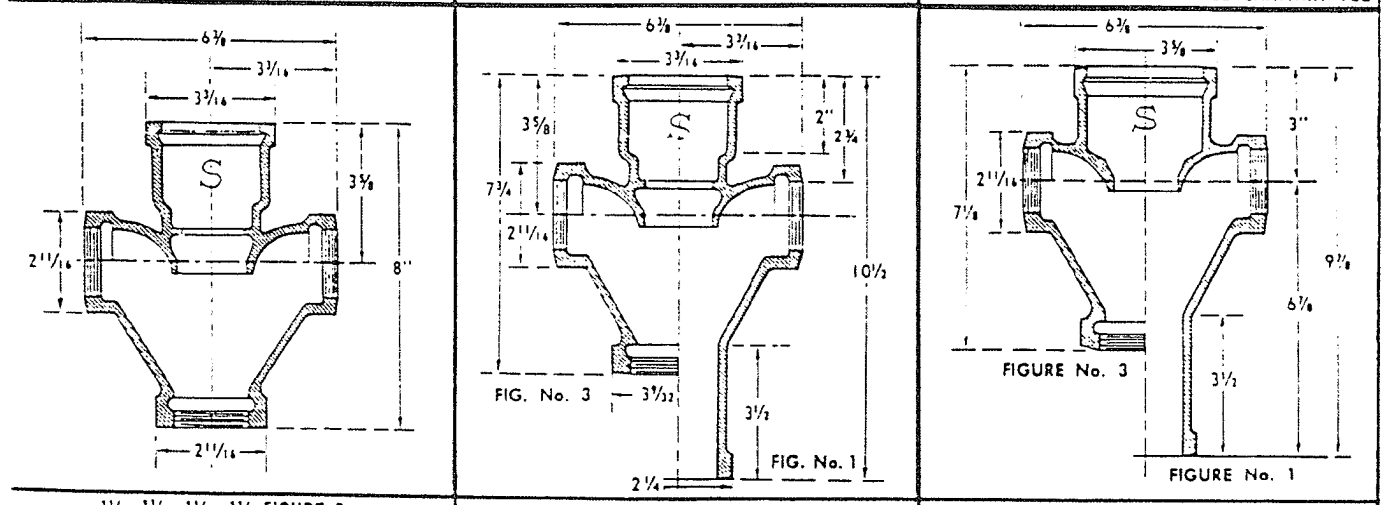

1½ x1½ x1½ x1½ FIGURE 3 | 2 x1½ x1½ x1½ FIGURE No. 1 & No. 3 | 2 x2 x1½ x1½ FIGURES No. 1 & No. 3

Licensed to Public.Resource.Org. Distribution Prohibited.

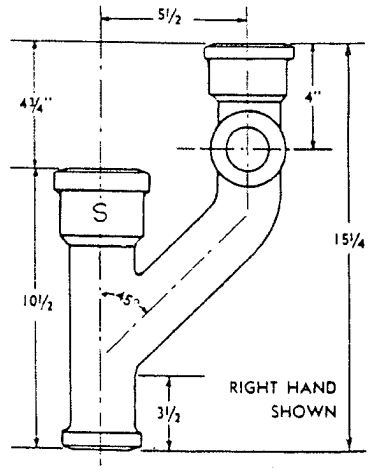

FIGURE #2 – 2 x 1½ – SINGLE, LEFT or RIGHT

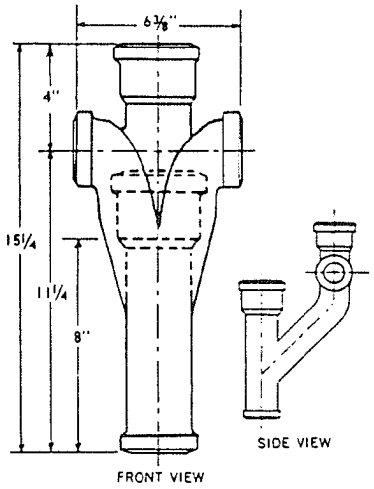

FIGURE #2 – 2 x 1½ – DOUBLE

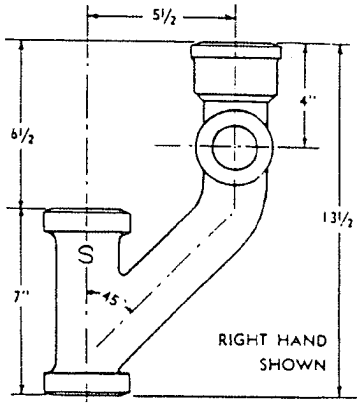

FIGURE #4 – 1½" – SINGLE, LEFT or RIGHT

FIGURE #4 – 2 x 1½ – SINGLE, LEFT or RIGHT

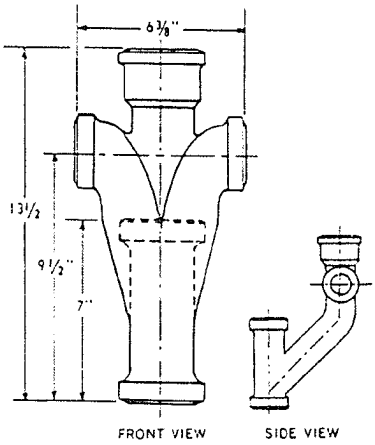

FIGURE #4 – 2 x 1½ – DOUBLE

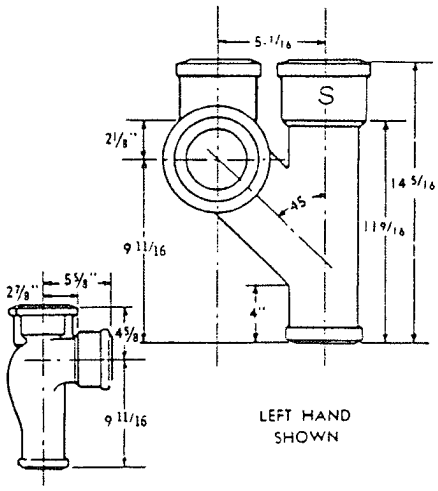

FIGURE #6 – 3 x 2 – SINGLE, LEFT or RIGHT

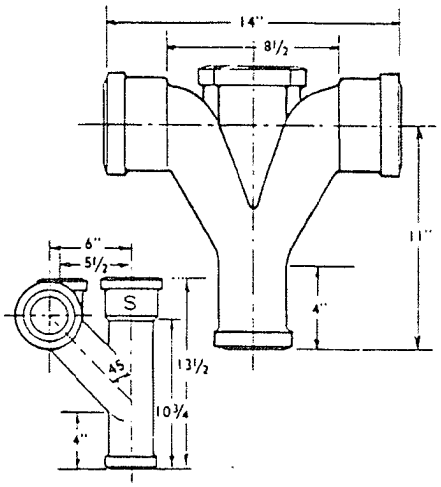

FIGURE #6 – 3 x 2 – DOUBLE

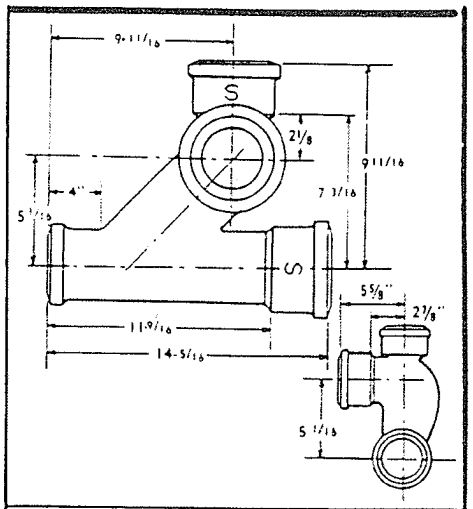

FIGURE #8 – 3 x 2 – SINGLE, LEFT or RIGHT

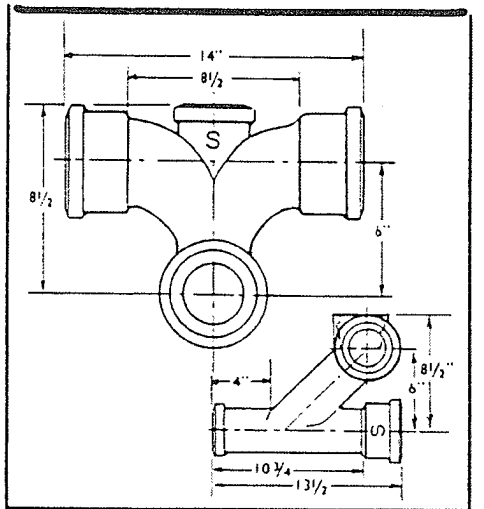

FIGURE #8 – 3 x 2 – DOUBLE

Licensed to Public.Resource.Org. Distribution Prohibited.

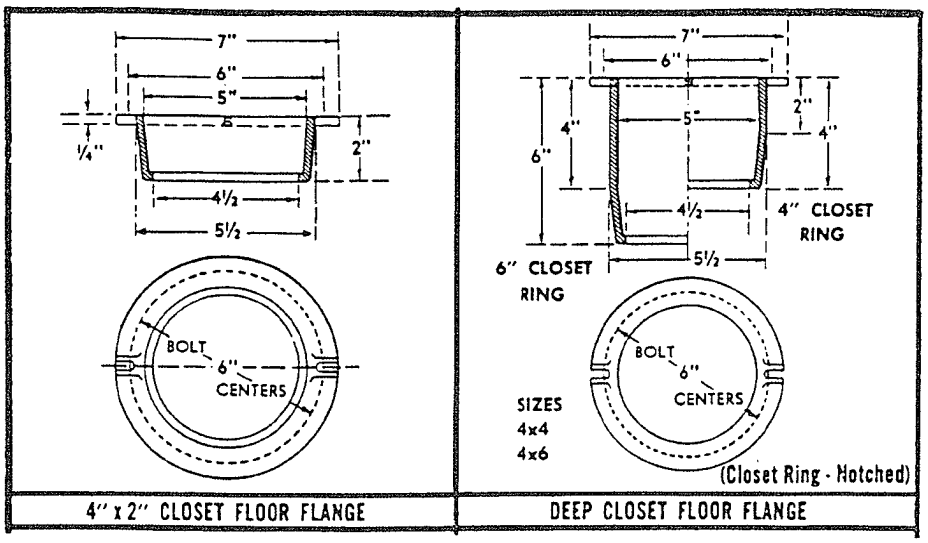

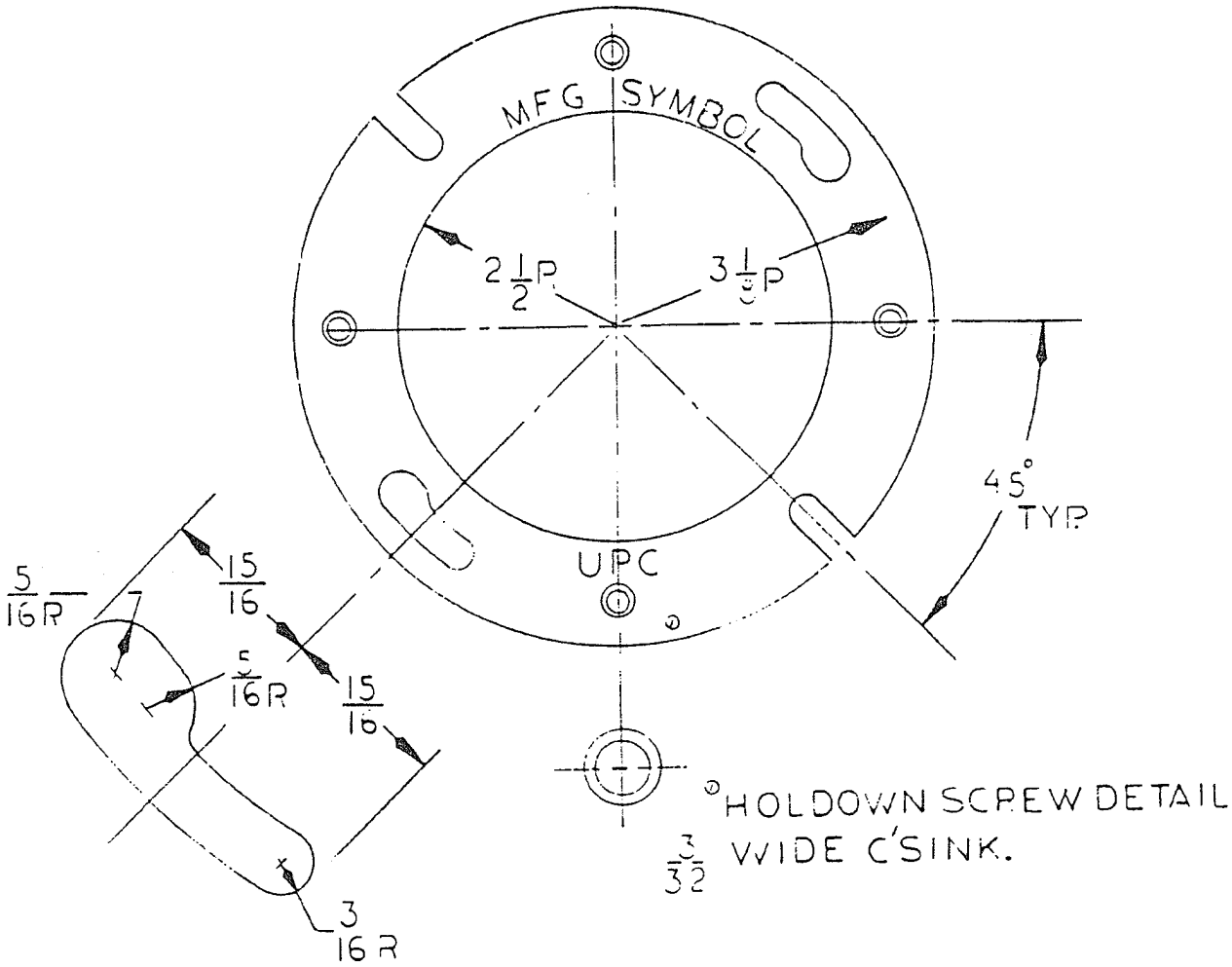

OPTIONAL SLOT & SCREW DETAIL

Licensed to Public.Resource.Org. Distribution Prohibited.